# Space–bandwidth product of optical signals and systems

**Adolf W. Lohmann**

*Weizmann Institute of Science, Rehovot 76100, Israel*

**Rainer G. Dorsch***

*Physikalisches Institut, Universität Erlangen, D-91058 Erlangen, Germany*

**David Mendlovic and Zeev Zalevsky**

*Faculty of Electrical Engineering, Tel Aviv University, 69978 Tel Aviv, Israel*

**Carlos Ferreira***

*Departament Interuniversitari d'Optica, Universitat de Valencia, 46100 Burjassot, Spain*

Received March 20, 1995; revised manuscript received September 22, 1995; accepted September 22, 1995

The space–bandwidth product (SW) is fundamental for judging the performance of an optical system. Often the SW of a system is defined only as a pure number that counts the degrees of freedom of the system. We claim that a quasi-geometrical representation of the SW in the Wigner domain is more useful. We also represent the input signal as a SW in the Wigner domain. For perfect signal processing it is necessary that the system SW fully embrace the signal SW. © 1996 Optical Society of America

## 1. INTRODUCTION

The price of an optical system is connected with its space–bandwidth product (SW) requirements. For a given set of signals, or images, the designer tries to reduce the price of the optical system to a minimum. The term SW emerged at first only implicitly in the context of the resolution limit, which was due to Abbe.[1] Von Laue determined the number of degrees of freedom behind an object area, from where light could be accepted within a certain solid angle.[2] Lukosz,[3] Lohmann, [4] and others used the term SW explicitly in the mid-1960's. VanderLugt refers to it in his recent book.[5] We want to clarify the meaning of the SW. In fact there are two different but related SW definitions. The SW might describe either an optical system or an optical signal. The system may serve to perform imaging, possibly with magnification, or Fraunhofer diffraction, or something else. The SW of a signal or of a set of signals is defined by the location ($x$) and by the range of spatial frequencies [$\nu = (\sin\alpha)/\lambda$] within which the signal is nonzero. The SW, whether for a system or for a signal, may be either a pure number (degrees of freedom) or a specific area in the ($x$, $\nu$) domain, which we will refer to as the Wigner domain. In Section 2 we will treat the SW as a pure number. In Section 3 we will consider the SW as an area within the Wigner domain. And in Section 4 we discuss the interaction between signal SW and system SW. We derive some inequalities that guarantee a lossless transfer of information. We also discuss reversibility issues.

## 2. NUMERICAL SPACE–BANDWIDTH PRODUCT

The well-known sampling theorem applies to signals $u(x)$ that are band limited [Eq. (1)] and limited in size [Eq. (2)]:

$$\tilde{u}(\nu) = \int u(x)\exp(-2\pi i\nu x)\mathrm{d}x = 0 \qquad \text{outside of } |\nu| \le \Delta\nu/2\,. \tag{1}$$

We also assume that

$$u(x) = 0 \qquad \text{outside of } |x| < \Delta x/2\,. \tag{2}$$

The two features can coexist with reasonable accuracy if the product $\Delta x\Delta\nu$ is large compared with unity, which we assume to be the case.

The signal is completely known if we know it only at equidistant sampling points separated by $\delta x = 1/\Delta\nu$. The total number of these samples is

$$N_I = \Delta x/\delta x = \Delta x\Delta\nu\,. \tag{3}$$

The number $N_I$ is the numerical SW of a signal or possibly of a set of signals. $I$ represents the second letter of the word "signal."

Now we consider the numerical SW of an optical system, abbreviated as $N_Y$. The $Y$ is the second letter of "system." The optical system may provide an input area of size $|x| \le \Delta x'/2$. And the system may accept plane waves in directions $\alpha$ according to

$$|x| \le \Delta x'/2, \qquad |\sin\alpha| \le \lambda\Delta\nu'/2\,. \tag{4}$$

Hence the system is prepared to accept signals with $N_Y$ degrees of freedom:

$$N_Y = \Delta x'\Delta\nu'. \tag{5}$$

0740-3232/96/030470-04$06.00 © 1996 Optical Society of America

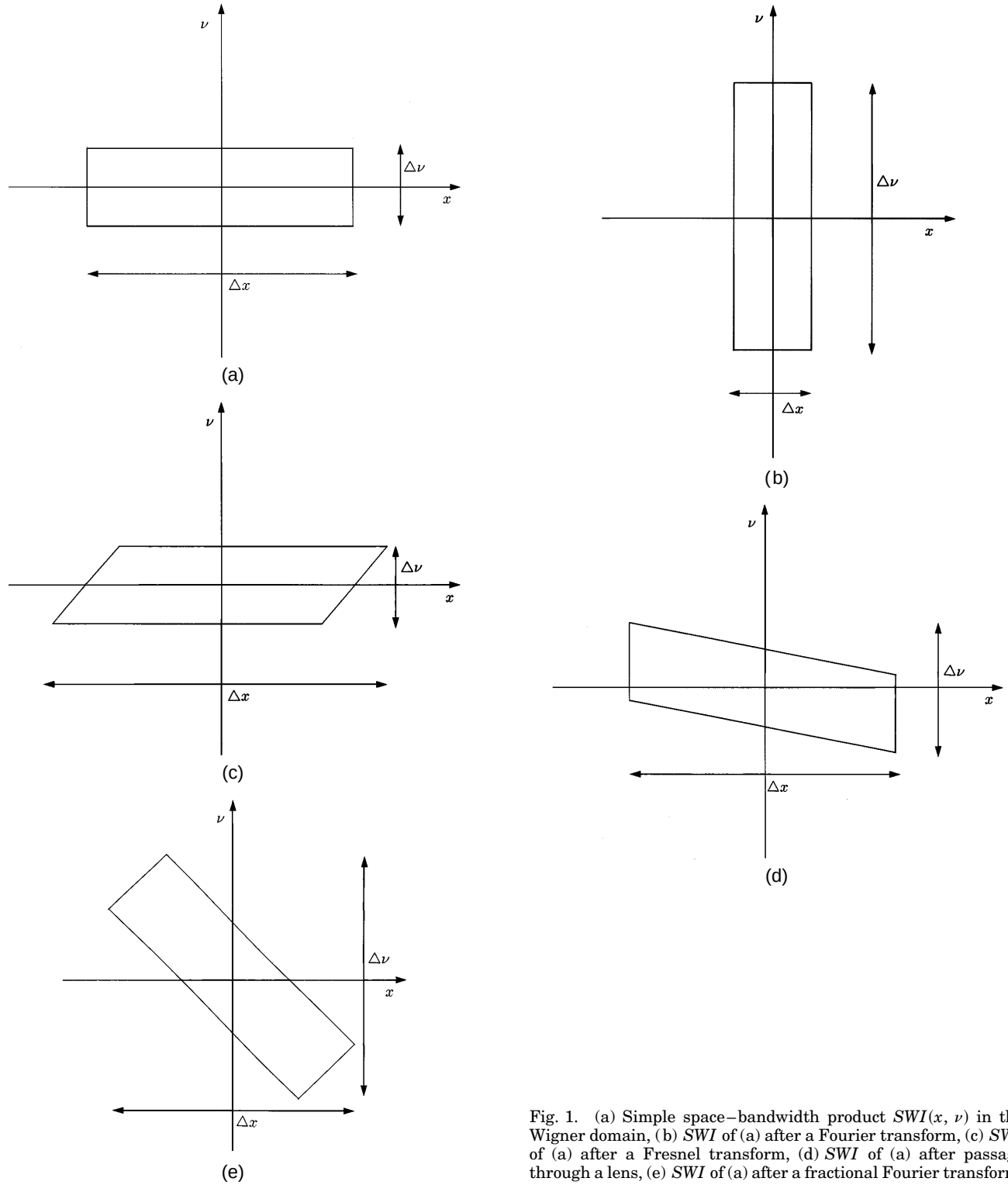


Fig. 1. (a) Simple space–bandwidth product $SWI(x, \nu)$ in the Wigner domain, (b) *SWI* of (a) after a Fourier transform, (c) *SWI* of (a) after a Fresnel transform, (d) *SWI* of (a) after passage through a lens, (e) *SWI* of (a) after a fractional Fourier transform.

## 3. SPACE–BANDWIDTH PRODUCT SHAPE

Each signal $u(x)$ can be described indirectly and uniquely by its Wigner distribution function $W$ in the space/spatial frequency domain[6]:

$$W(x, \nu) = \int u(x + x'/2)u^*(x - x'/2)\exp(-2\pi i \nu x')\mathrm{d}x'. \tag{6}$$

The step from $u(x)$ to $W(x, \nu)$ is reversible, apart from a constant phase factor:

$$\int W(x/2, \nu)\exp(2\pi i \nu x)\mathrm{d}\nu = u(x)u^*(0), \tag{7}$$

$$|u(0)|^2 = \int W(0, \nu)\mathrm{d}\nu. \tag{8}$$

Similarly, the Wigner distribution function is also related

to the Fourier transform of the object [Eq. (1)]:

$$W(x, \nu) = \int \tilde{u}(\nu + \nu'/2)\tilde{u}^*(\nu - \nu'/2)\exp(+2\pi i \nu' x)\mathrm{d}\nu'. \tag{9}$$

Equations (6)–(9) tell us that it is equally possible to treat signal processing questions in three different domains: $(x)$, $(\nu)$, and $(x, \nu)$. For what follows, the $(x, \nu)$ domain is best suited.

Equations (1) and (2) define a rectangular symmetrical area in the $(x, \nu)$ domain. That rectangle may be occupied by the $W(x, \nu)$ of the signal $u(x)$, as shown in Fig. 1(a). If we replace $u(x)$ by its Fourier transform, the original $W$ must be rotated by 90°, since the roles of space and frequency have been exchanged [Fig. 1(b)]. A Fresnel transform applied to $u(x)$ describes propagation in free space. The corresponding operation in the Wigner domain is a horizontal shearing [Fig. 1(c)]. Passage of the light through a lens corresponds to a vertical shearing [Fig. 1(d)], and a fractional Fourier transform[7] of $u(x)$ corresponds to a rotation [Fig. 1(e)]. A magnification of $u(x)$ means stretching in $x$ and squeezing in $\nu$.

Common to all these operations is that the size of the $W$ area does not change. Hence $N_I$, the numerical value of the SW, remained the same. But the shape did change in various ways. The changes in the $W$ domain can be described as an affine transformation:

$$SWI(x, \nu) \rightarrow SWI(Ax + B\nu, Cx + D\nu). \tag{10}$$

The $(ABCD)$ coefficients should satisfy the conservation of the area. The letter $I$ refers again to "signal." It is time now to define the $SWI(x, \nu)$ more precisely. The $SWI$ is binary. It is unity where the Wigner distribution function $W(x, \nu)$ is essentially nonzero. And it is zero where $W(x, \nu)$ is essentially zero. The term "essentially" hides the fact that we do not set a threshold for $W(x, \nu)$ and that we smooth the boundaries of $SWI(x, \nu)$. Furthermore, holes within the $W(x, \nu)$ are ignored.

The definition of the $SWI(x, \nu)$ becomes somewhat more precise if it is related to a whole set of signals $u(x)$ instead of to a specific signal. The ensemble average of the Wigner distribution function $W(x, \nu)$ is smoother and most likely without any holes because the $W(x, \nu)$ is not only real but almost everywhere nonnegative.

Now we turn our attention from signals to systems. The shape of the SW of a system, called here $SWY(x, \nu)$, is typically a symmetrical rectangle as in Fig. 1(a), defined by inequalities (4). But the rectangular shape is not a requirement. For example, a photographic camera, whose resolution degrades from the center to the edges of the image field, has an $x$-dependent local bandwidth $\Delta\nu'(x')$. If $\Delta\nu'$ is sufficiently smooth, the sampling distance $\delta x' = 1/\Delta\nu'$ may vary across the field (Fig. 2).

## 4. RELATIONS AMONG THE VARIOUS SPACE–BANDWIDTH PRODUCTS

The numerical SW's were called $N_I$ (for signals) and $N_Y$ (for systems). They are measures for the sizes of $SWI(x, \nu)$ and $SWY(x, \nu)$, respectively. In Section 3 we saw how the $SWI(x, \nu)$ may change its shape in many ways (Fig. 1) but without changing $N_I$, the numerical value of $SWI$.

Most systems have a rectangular $SWY(x, \nu)$, as shown in Fig. 1(a). Hence an $SWI(x, \nu)$ as in Fig. 1(a) may be able to pass through the system undamaged. But the other $SWI(x, \nu)$ [in Figs. 1(b)–1(e)] might be cut off at their corners by the $SWY(x, \nu)$. Hence we conclude, for a lossless transfer through a system, that the following conditions hold:

$$\text{necessary:} \quad N_I \leq I_Y \quad \text{(not sufficient)}, \tag{11}$$

$$\text{sufficient:} \quad SWI(x, \nu) \subset SWY(x, \nu). \tag{12}$$

Lossless in this context meant that $(N_I)_{\mathrm{INPUT}} = (N_I)_{\mathrm{OUTPUT}}$, or briefly $N_I = N_I'$.

In the lossy case mentioned above, some part of the signal is irreversibly destroyed. For example, the size $\Delta x$ of the input $u(x)$ might be too large for the entrance window $\Delta x'$ of the system. Or the spatial frequency spectrum $\tilde{u}(\nu)$ of the input might be wider than the angular acceptance of the system.

These statements might suggest that a lossless system is not able to enlarge or to compress $SWI(x, \nu)$ in a reversible manner. This hypothesis is wrong, as the following example will show. The original signal $u(x)$ may have a bandwidth $\Delta\nu$ and a size $\Delta x$. Its $SWI(x, \nu)$ may look as in Fig. 1(a). Our system consists of a phase grating

$$G(x) = \exp[i\phi(x)] = \sum A_m \exp(2\pi i m \nu_0 x) \tag{13}$$

that converts the input $u(x)$ into the output $v(x)$:

$$v(x) = u(x)G(x). \tag{14}$$

This system is apparently reversible, since a second such system $G^*(x) = \exp[-i\phi(x)]$ would restore the input $u(x)$. But the $SWI(x, \nu)$ belonging to $v(x)$ is substantially enlarged. We compare the Wigner distribution functions belonging to $u(x)$ and to $v(x)$:

$$W_u(x, \nu) = \int u(x + x'/2)u^*(x - x'/2)\exp(-2\pi i \nu x')\mathrm{d}x', \tag{15}$$

$$W_v(x, \nu) = \sum \sum A_m A_n \exp[2\pi i \nu_0 x(m - n)] \times W_u[x, \nu - \nu_0(m + n)/2]. \tag{16}$$

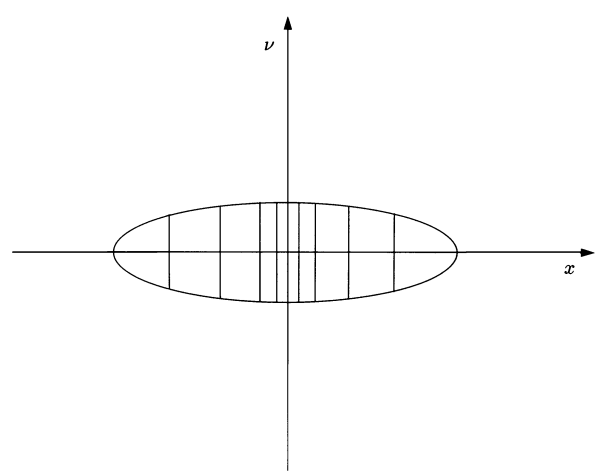


Fig. 2. $SWY$ of a system with space-variant bandwidth.

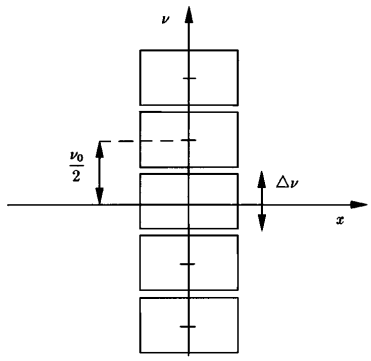


Fig. 3. *SWI* of a signal, multiplied by a grating.

The $SWI(x, \nu)$ of $v(x)$ is illustrated in Fig. 3. The new islands ($m + n \neq 0$) are clearly separated if $\nu_0 > 2\Delta\nu$ (which, however, is not essential for our argument). The important point is that those new islands can be shifted back to the central location [as in Fig. 1(a)] by means of the second system, the complex-conjugate phase grating. This reversibility was possible because the partial signals, represented by the new islands, were assumed to be perfectly coherent when entering the second system. Furthermore, the system (the grating) and its inverse were lossless. The essence of this gedanken experiment was as follows: The system $G(x)$ acting on $u(x)$ causes an enlargement of the $SWI(x, \nu)$. And the system $G^*$ applied upon $v(x)$ causes a compression of the $SWI(x, \nu)$. Enlargement as well as compression of the *SWI* may well be reversible.

## 5. CONCLUSION

We have shown that one should distinguish between the SW of a signal and the SW of a system. That enables us to define criteria for reversible processes. It is often not enough to use the number of degrees of freedom as a SW. Also, the shape of the SW in the Wigner domain is important. All those considerations do apply also to the time–bandwidth product.

*The work was conducted during the author's visit to Tel Aviv University.

## REFERENCES

1. See O. Lummer and F. Reiche, *Die Lehre von der Bildentstehung im Mikroskop von E. Abbe* (Vieweg, Braunschweig, 1910).
2. M. von Laue, Ann. Phys. (Leipzig) **44,** 1197 (1914).
3. W. Lukosz, "Optical systems with resolving powers exceeding the classical limit," J. Opt. Soc. Am. **56,** 1463–1472 (1996).
4. A. W. Lohmann, "The space–bandwidth product, applied to spatial filtering and holography," Research Paper RJ-438 (IBM San Jose Research Laboratory, San Jose, Calif., 1967), pp. 1–23.
5. A. VanderLugt, *Optical Signal Processing* (Wiley, New York, 1992), pp. 10, 50.
6. M. J. Bastiaans, "Wigner distribution function and its application to first-order optics," J. Opt. Soc. Am. **69,** 1710–1716 (1979).
7. A. W. Lohmann, "Image rotation, Wigner rotation, and the fractional Fourier transform," J. Opt. Soc. Am. A **10,** 2181–2186 (1993).